Journal of Personality Disorders, 19(4), 440–461, 2005

THE STRUCTURE OF AXIS II DISORDERS IN ADOLESCENTS: A CLUSTER- AND FACTOR-ANALYTIC INVESTIGATION OF DSM-IV CATEGORIES AND CRITERIA

Christine Durrett, MA, and Drew Westen, PhD

The aim of this study was to ascertain whether the structure of personality disorder (PD) symptoms in adolescents assessed using DSM–IV diagnoses and diagnostic criteria resembles the structure intended for the diagnosis of PDs in adults. A national sample of clinicians rated DSM–IV Axis II criteria on 294 adolescent patients in treatment for enduring maladaptive personality patterns. Cluster analysis replicating procedures used in an adult sample by Morey (1988) identified considerable similarity between adult and adolescent PDs, as did exploratory factor analysis of ratings of diagnostic criteria, which yielded ten empirically derived factors that resembled the ten DSM–IV PDs. Cluster analysis and confirmatory factor analysis with indicators of Axis II symptoms produced mixed results in replicating the DSM–IV hierarchical structure of PDs (Clusters A, B, and C), although hierarchical models generally fared better than models specifying only first–order factors or clusters. The structure of personality pathology as assessed by Axis II criteria in adolescents resembles that outlined in DSM–IV Axis II for adults, suggesting that PDs can be assessed in adolescents as in adults. Whether this is an optimal way of diagnosing personality pathology in adolescence, however, requires further investigation.

The *Diagnostic and Statistical Manual of Mental Disorders* (DSM–IV; APA, 1994) cautions against making personality disorder (PD) diagnoses in patients younger than 18. Nevertheless, a small but increasing literature suggests that PDs are diagnosable in adolescents (Bernstein, Cohen, Skodol, Bezirginian, 1996; Johnson et al., 1999; Levy, Becker, Grilo, Mutta-

From the Department of Psychological Sciences, University of Missouri-Columbia (C.D.) and the Departments of Psychology and Psychiatry and Behavioral Sciences, Emory University (D.W.).

The preparation of this article was supported in part by grants MH62377 and MH62378 from the National Institute of Mental Health to the second author.

Address correspondence to Drew Westen, PhD, Departments of Psychology and Psychiatry and Behavioral Sciences, Emory University, 532 N. Kilgo Circle, Atlanta, GA 30322; E-mail dwesten@emory.edu; or Christine Durrett, Department of Psychology, University of Missouri-Columbia, 200 South 7th St., Columbia, MO 65211, email cazxtd@mizzou.edu.

nah, Garnet et al., 1999; Ludolph et al., 1990; Westen & Chang, 2000; Westen, Shedler, Durrett, Glass, & Martens, 2003). Using structured interviews, adolescents aged 12 to 17 meet criteria for PDs at the same rates and in roughly the same proportions as young adults aged 18 to 37 (Grilo et al., 1998; Johnson et al., 1999). Personality pathology in adolescents also exhibits continuity with personality pathology and other mental disorders in adulthood (although hospitalized inpatient adolescents in acute distress may not as reliably maintain a PD diagnosis over time) (see Bernstein et al., 1996; Daley, Hammon, Burge, Davila, Paley et al., 1999; Johnson et al., 1999; Mattanah, Bekcer, Levy, Edell et al., 1995). Child/adolescent psychiatric disorders are predictive of later Axis II diagnoses in adulthood, particularly when multiple comorbid diagnoses are present in childhood (Lewinsohn, Rohde, Seeley, & Klein, 1997), and the odds of a young adult PD increase significantly with the presence of an Axis II diagnosis made in adolescence, over and above the predictive utility of Axis I diagnoses made in both childhood and adolescence (Kasen, Cohen, Skodol, Johnson, & Brook, 1999).

The aim of the present study was to assess the structure of Axis II PD symptoms in adolescents. In particular, we attempted to replicate and extend prior cluster– and factor–analytic studies using adult samples. Morey (1988) conducted a cluster–analytic study of DSM–III–R PD criteria using a national sample of clinicians who provided data on 291 adult PD patients. He presented clinicians with a checklist of DSM–III and DSM–III–R PD criteria, in random order, and asked them to rate each symptom as present or absent. He then submitted the data to a hierarchical cluster analysis (clustering items, not cases). The cluster solution showed relatively high concordance with the DSM–III–R classification, essentially recovering the 11 PD diagnoses of DSM–III–R. The primary differences found at the disorder level reflected considerable overlap between Schizotypal and Schizoid and between Narcissistic and Antisocial PDs. A more substantial difference between DSM–III–R and the empirical structure emerged at the superordinate level, in that Morey found two broad clusters (internalizing and externalizing), rather than the hypothesized three of the DSM (Clusters A, B, and C).

In several studies researchers have applied factor analysis to PD criteria in adults as well, with varying results. Applying confirmatory factor analysis (CFA) to Axis II criteria in adults, O'Connor and Dyce (1998) found moderate support for DSM-IV structure, although other models including the Five-Factor Model and an empirically derived 7–factor model better accounted for the data. In other studies, self– and peer reports of PD symptoms also fit DSM structure to some degree although substantial deviations from the DSM classification are also noted (Thomas, Turkheimer, & Oltmanns, 2003). For instance, Ekselius, Lindstroem, von Knorring, Bodlund et al. (1994) found 23 factors of personality pathology, many of which were defined by symptoms from different personality disorders. In

general, researchers have been able to generate empirically derived factors resembling DSM personality disorders using exploratory and confirmatory factor analysis as applied to DSM criteria, although in some studies alternate structures have fit the data better (e.g., Schotte, DeDoncker, Vankereckhoven, Vertommen, & Cosyns, 1998).

The hierarchical structure of Axis II has also received varying degrees of support from empirical studies. Using exploratory factor analysis (EFA) applied to clinician–report data, Hyler and Lyons (1988) found factors corresponding to the three broad clusters of PDs described in DSM–III–R and DSM–IV. In several studies a three–cluster hierarchical DSM–IV structure was determined to be a better fit than a model in which the diagnoses are uncorrelated (Sanislow, Morey, Grilo, Gunderson, Shea et al., 2002; Yang, Bagby, Costa, Ryder, & Herbst, 2002). However, some studies using CFA have found that empirically derived cluster solutions other than the DSM–IV system of Clusters A, B, and C are a better fit to the data (Fossati, Maffei, Bagnato, Battaglia, Donati et al., 2000; Deary, Peter, Austin, & Gibson, 1998). Obsessive–compulsive PD, for example, often does not load with the other Cluster C disorders.

In sum, the PD taxonomy outlined in DSM–IV is to some degree reproducible in adults using factor and cluster analytic techniques applied to the diagnostic criteria for the Axis II disorders, whether or not it is the optimal way of classifying PDs. If adolescent PDs are similar to adult PDs, we would expect similar structures to emerge (see De Clerq & De Fruyt, 2003). In the present study, we first replicated Morey's cluster–analytic study using a sample of adolescent patients. We then applied exploratory and confirmatory factor analysis to different methods of assessing PDs in adolescents to assess both the reproducibility of the ten DSM–IV Axis II disorders and the hierarchical structure of PD dimensions in adolescents. Our goal was to see whether the structure of PD symptoms as assessed by Axis II criteria in adolescents resembles the structure delineated in DSM–IV.

METHOD

PARTICIPANTS

We recruited experienced psychologists and psychiatrists to provide data on patients currently in their care (similar to Morey, 1988). In the first wave of data collection, we recruited psychologists and psychiatrists from the membership roster of the American Academy of Child and Adolescent Psychiatry. Due to a low response rate (approximately 20% to our initial letter of inquiry), in the second wave we supplemented this list with a random sample of members of the American Psychological Association, selected by computer search, who reported treating adolescents and had at least three years of practice experience post–training. The response rate of this latter group was much higher (approximately 40%), of whom approxi-

mately half submitted data for the present study. Psychologists responded at substantially higher rates than psychiatrists; however, the data provided by the two groups did not differ on any substantive variable, suggesting that potential biases reflecting differences between responders and nonresponders had little impact on obtained findings.

PROCEDURES

In an initial letter to clinicians, we described the project and asked whether they would be willing to participate in a project that would require approximately an hour of their time. Enclosed was a postcard on which they could indicate interest in participating and provide information on the number of adolescent patients that they treat at each age from 14 to 18. Based on these responses, we sent out packets to clinicians and asked them to provide data on an adolescent patient of a designated age. We sent out packets in batches of 50 to 100, adjusting the numbers sent in each successive batch to obtain relatively equal numbers of males and females of each age. Clinicians received an honorarium of $25.

To ensure random selection of patients described, we asked clinicians to select the last patient they saw in the previous week who met study criteria. We specified that the patient must have "enduring maladaptive patterns of thought, feeling, motivation, or behavior—that is, personality," and be of the age we requested. Our goal was to obtain a sample of patients with personality pathology, without specifying either severity or type. Each clinician described only one patient, to minimize rater–dependent variance.

Clinicians who agreed to participate received a packet including a demographic and diagnostic questionnaire and three measures of personality pathology, together with several other measures intended for other analyses. Clinicians assessed PDs in multiple ways, three of which are of relevance here. First, they listed personality disorder diagnoses, if any. Second, they completed a checklist of all PD criteria included on Axis II for all disorders, in random order, indicating whether each item was present or absent. This allowed us to generate both categorical and dimensional PD diagnoses using DSM–IV criteria and diagnostic algorithms.[1] Third, they rated each of these symptoms a second time for the extent to which it was true of the patient, using a 7–point Likert–type scale (1 = not true, 7 = very true), to provide a dimensional rating of each symptom.

STATISTICAL ANALYSES

Our general data–analytic strategy was to use multiple statistical aggregation techniques and multiple ways of rating Axis II characteristics to

1. Due to a clerical oversight, one criterion was omitted (the third for Schizoid PD) and two were combined into one item (the fifth and sixth for Paranoid PD).

assess the extent to which Axis II diagnoses that were developed for adults can be reproduced statistically from data using an adolescent sample. Using multiple algorithms and ways of scaling Axis II, we were able to test the consistency of the findings. We conducted three analyses.

First, replicating Morey (1988), we conducted a cluster analysis of Axis II criteria. Second, we applied EFA to all Axis II criteria (rated present/absent) to see whether the factor structure of Axis II symptoms in adolescents reproduces the classification developed for (and from) adult samples in the DSM–IV. Finally, we applied CFA to the seven–point ratings of the Axis II criteria to see if we could reproduce both the ten DSM–IV disorders and higher–order factors (Clusters A, B, and C) and to compare the goodness of fit between of hierarchical and nonhierarchical models.

RESULTS

The sample consisted of 294 adolescent patients. Clinician–respondents (61.4% psychiatrists, 50.2% male) were on average highly experienced (mean years experience post–training = 13.4, *SD* = 9.4). Clinicians' theoretical orientations were varied: 42.7% described themselves as eclectic, 34.8% psychodynamic, 11.6% cognitive–behavioral, 6.5% biological, and 3.8% family systems. Most worked in multiple settings: 77.0% private practice, 31.3% outpatient clinic, 25.8% hospital, 13.4% school, and 6.5% forensic. Clinicians tended to know the patients well: median length of treatment prior to completing the questionnaires was 20 sessions.

Patients were relatively evenly distributed by gender (52.9% female) and age (for ages 14, 15, 16, 17, and 18; the number of patients per age was 54, 58, 67, 59, and 53, respectively). The majority (84.9%) were White, with most of the remaining patients Black or Hispanic. With respect to SES, clinicians classified 7.5% as poor, 20.9% working class, 50.7% middle class, and 20.9% upper class.

CLUSTER ANALYSIS OF AXIS II CRITERIA

Replicating Morey (1988), we clustered items (symptoms) rather than patients (i.e., using between-symptoms distance instead of between–subjects distance). (An initial attempt to cluster patients rather than symptoms did not recover any coherent clusters, despite the use of several different cluster algorithms with both standardized and nonstandardized variables. We address the potential significance of this result in the Discussion.) Following Morey, we used two hierarchical agglomerative cluster procedures, average linkage and Ward's method. We randomly split the patient sample in two, classified items in each half using both cluster algorithms, and then used the algorithm that produced better replicability across the split halves to classify the full dataset. We chose ten clusters as the upper limit, to match the ten diagnoses in the DSM–IV.

Table 1 describes the cluster membership of the Axis II criteria for the

TABLE 1. Cluster Membership of DSM–IV Axis II Absent/Present Criteria Ratings[a]

Cluster I Schizoid Criterion	Cluster II Avoidant Criterion	Cluster III Obsessive–Compulsive Criterion	Cluster IV Narcissistic Criterion	Cluster V Antisocial Criterion
SPD 1	AVPD 1	OCPD 1	NPD 1	APD 1
SPD 2	AVPD 2	OCPD 2	NPD 3	APD 2
SPD 4	AVPD 3	OCPD 3	NPD 5	APD 3
SPD 5	AVPD 4	OCPD 4	NPD 6	APD 4
SPD 6	AVPD 5		NPD 9	APD 5
SPD 7	AVPD 6			APD 6
STPD 6	AVPD 7			APD 7
STPD 8	DPD 1			NPD 7
OCPD 8	DPD 2			BPD 6
	DPD 4			BPD 8
	STPD 9			

Cluster VI Dependent Criterion	Cluster VII Histrionic Criterion	Cluster VIII Borderline Criterion	Cluster IX Paranoid Criterion	Cluster X Schizotypal Criterion
DPD 3	HPD 1	BPD 2	PPD 1	STPD 1
DPD 5	HPD 2	BPD 3	PPD 2	STPD 2
DPD 6	HPD 4	BPD 4	PPD 3	STPD 3
DPD 7	HPD 6	BPD 5	PPD 4	STPD 4
DPD 8	NPD 4	BPD 7	PPD 5/6	STPD 7
HPD 7		HPD 3	STPD 5	PPD 7
HPD 8		HPD 5	OCPD 6	OCPD 5
BPD 1			NPD 8	OCPD 7
				BPD 9
				NPD 2

[a]AVPD = Avoidant personality disorder, DPD = Dependent, SPD = Schizoid, STPD = Schizotypal, APD = Antisocial, BPD = Borderline, NPD = Narcissistic, HPD = Histrionic, PPD = Paranoid, OCPD = Obsessive–compulsive; criteria are numbered according to their order in the DSM–IV definition for each personality disorder.

245 adolescents whose present/absent Axis II checklist data were complete. Ward's method replicated best across split halves, so we used that algorithm to derive the classification across the full set of criteria. All 77 items joined a cluster at the ten–cluster limit and therefore none were dropped as outliers. As can be seen from the table, the cluster analysis reliably reproduced the ten PDs of the DSM so that we were able to label each cluster with a reasonable degree of confidence, because for each cluster items from a single PD compose from 50 to 100% of its item membership.

We assessed these clusters for similarity to the DSM–IV diagnostic system using the Rand statistic (Rand, 1971). This statistic is based on the proportion of entities assigned to the same category by two different classifications, given all possible pair–wise comparisons of the entities. It ranges from 0, when two clusterings have no similarities, to 1, when the clusterings are identical. The Rand statistic assessing similarity between the empirically derived classification and the DSM–IV was .92, reflecting a very high degree of concordance, comparable to Morey's finding of a .87 relation between his empirically derived clusters and the DSM–III–R PD criteria.

We also compared the hierarchical structure that emerged through clus-

ter analysis with (a) the three broad PD clusters of the DSM–IV (A—odd/eccentric, B—dramatic/erratic, and C—anxious/fearful) and (b) Morey's two superordinate clusters (internalizing and externalizing). Figure 1 depicts the hierarchical structure of the ten PD clusters in our adolescent sample. The empirical similarity between clusters is represented in the diagram as categories that merge, reading from the bottom (where histrionic and borderline form a cluster) to the top (where all disorders form the general class of personality disorders). We were unable to recover a hierarchy similar to either the three clusters delineated in DSM–IV or Morey's internalizing and externalizing clusters. Instead, we found four clinically coherent superordinate clusters, which we designated as detached

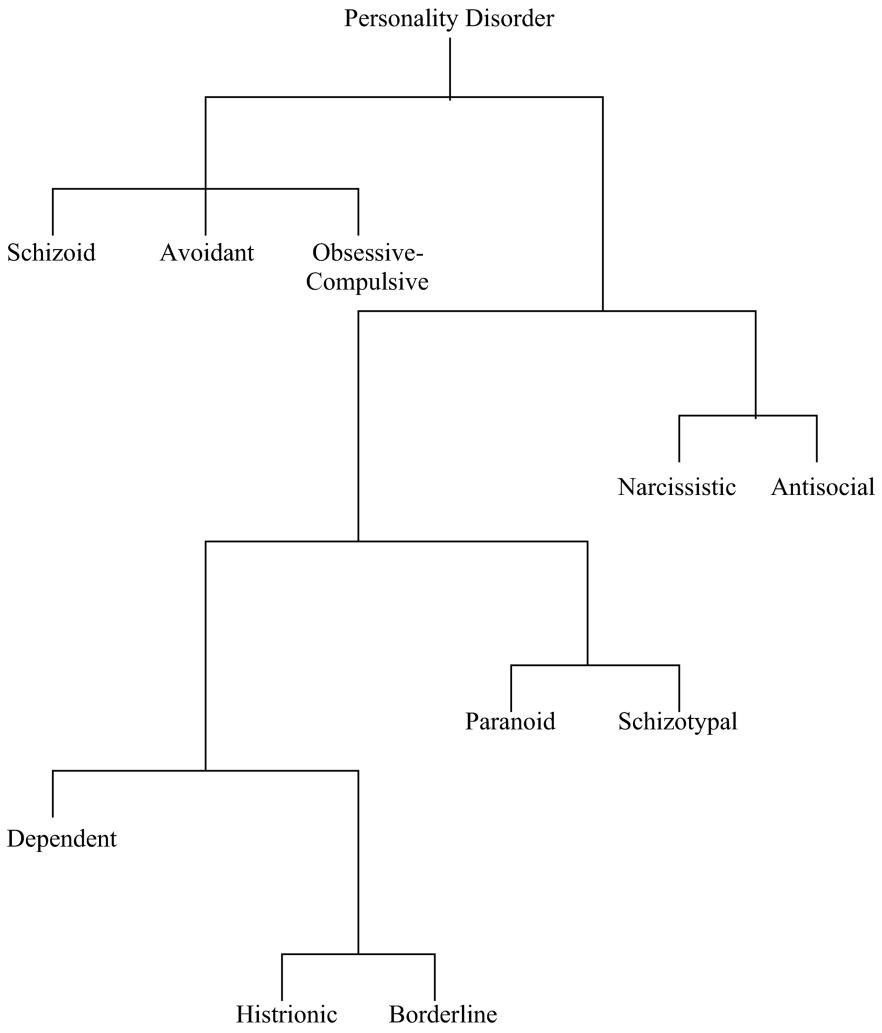

FIGURE 1. Hierarchical Cluster Structure of PDs in Adolescents.
Note. Based on absent/present personality disorder criteria ratings.

(Schizoid, Avoidant, and Obsessive–Compulsive), manipulative/unempathic (Narcissistic, Antisocial), unstable/insecurely attached (Borderline, Histrionic, and Dependent), and suspicious (Paranoid, Schizotypal).

EXPLORATORY FACTOR ANALYSIS

Next we used EFA to ascertain the extent to which the dimensions of personality pathology as assessed by Axis II criteria in adolescents resemble the DSM–IV groupings designed for adults. We chose to begin with an EFA both to replicate prior research and because we did not want to assume the same factor structure for adolescents as for adults without first assessing whether an alternative factor solution might emerge with more theoretical or clinical coherence. We first factored present/absent item ratings of the criteria for each of the Axis II disorders using the Axis II Checklist for the 245 patients with complete data. We used present/absent ratings to maximize the similarity to the Axis II format, which requires dichotomous decisions at the criterion level. Although we examined other extractions, we chose a priori to extract ten factors to test the replicability of the DSM–IV classification. We also used multiple factor–analytic algorithms and estimation procedures, although they all converged on similar structures. Because comorbidity among PDs is high, we had good reason to assume that the factors might not be orthogonal; thus, we conducted factor analyses using both orthogonal (Varimax) and oblique (Promax) rotations. In each case, results from the oblique rotation were for all intents and purposes the same as the results obtained from the Varimax rotation, so we present only the results of the orthogonal rotation using maximum likelihood estimation.

The 10–factor solution was coherent and accounted for 50% of the variance. The eigenvalues of the factors extracted were 5.91, 5.55, 4.31, 3.94, 3.73, 3.32, 3.04, 3.00, 2.79, and 2.42, all of which exceeded chance levels using parallel analysis (Horn, 1965; O'Connor, 2000). There was a total of 21 factors with eigenvalues greater than one, but a break in the scree plot was evident after the first 10 factors. Factor loadings are reproduced in Table 2. All items loaded primarily on one factor; no cross–factor loadings exceeded 0.40, and few exceeded 0.25.

The ten factors correspond well to the ten categories of PD from the DSM–IV. Each factor was composed primarily of criteria from a single PD. To examine the relationship between the resulting personality dimensions and the DSM–IV PDs, we correlated the factor scores with the presence or absence of each categorical PD diagnosis (dummy coded 0/1). (Diagnoses were determined by summing the number of criteria met per disorder, as indicated by present/absent ratings on the Axis II Checklist, and applying DSM–IV cutoffs.) The results are reported in Table 3. As can be seen, the factors showed evidence of both convergent and discriminant validity—considerably stronger evidence, in fact, than the DSM–IV criteria themselves, which showed substantial comorbidity in this sample (considered

TABLE 2. Factor Loadings of DSM–IV Axis II Absent/Present Criteria Ratings[a]

Factor I Avoidant		Factor II Antisocial		Factor III Histrionic		Factor IV Narcissistic	
Criterion	**Loading**	**Criterion**	**Loading**	**Criterion**	**Loading**	**Criterion**	**Loading**
AVPD 5	.73	APD 7	.70	HPD 8	.64	NPD 1	.69
AVPD 3	.68	APD 1	.68	HPD 2	.59	NPD 9	.66
DPD 4	.66	APD 5	.64	DPD 7	.57	NPD 5	.66
AVPD 6	.65	APD 4	.64	HPD 6	.49	NPD 3	.65
AVPD 7	.64	APD 2	.62	HPD 4	.48	NPD 4	.56
AVPD 4	.63	APD 6	.61	HPD 7	.47	OCPD 8	.45
AVPD 2	.62	BPD 4	.60	HPD 1	.47	NPD 7	.44
AVPD 1	.55	APD 3	.51	HPD 3	.45	HPD 1	.44
DPD 3	.52	BPD 8	.51	PPD 7	.44		
SPD 4	.52	NPD 6	.47	NPD 2	.43		
STPD 6	.46	NPD 7	.41	HPD 5	.41		

Factor V Schizoid		Factor VI Paranoid		Factor VII Obsessive–Compulsive		Factor VIII Schizotypal	
Criterion	**Loading**	**Criterion**	**Loading**	**Criterion**	**Loading**	**Criterion**	**Loading**
SPD 5	.80	PPD 1	.68	OCPD 1	.67	STPD 2	.72
STPD 8	.77	PPD 4	.62	OCPD 3	.65	STPD 3	.63
SPD 2	.60	PPD 2	.59	OCPD 2	.63	STPD 4	.61
SPD 6	.53	PPD 3	.58	OCPD 4	.55	STPD 7	.54
SPD 1	.52	STPD 5	.51	OCPD 7	.52		
SPD 7	.41	NPD 8	.44	OCPD 5	.40		

Factor IX Dependent		Factor X Borderline	
Criterion	**Loading**	**Criterion**	**Loading**
DPD 8	.65	BPD 5	.68
DPD 6	.58	BPD 2	.52
BPD 1	.54	BPD 6	.52
DPD 1	.46	BPD 3	.50
		BPD 7	.42

[a]AVPD = Avoidant personality disorder, DPD = Dependent, SPD = Schizoid, STPD = Schizotypal, APD = Antisocial, BPD = Borderline, NPD = Narcissistic, HPD = Histrionic, PPD = Paranoid, OCPD = Obsessive–compulsive; criteria are numbered according to their order in the DSM–IV definition for each personality disorder.

both categorically and dimensionally) as in all adult samples to date. The minimum correlation between a factor and the primary PD associated with it was .54 (Dependent PD). The highest such correlation was .78 (Antisocial PD). The highest correlation between a factor and any PD other than the one closest related to it was .33, and the majority of these correlations were small and nonsignificant.

In a further examination of convergent and discriminant validity, we replicated the above analyses based on a ten–factor orthogonally rotated solution from the 7-point ratings of PD criteria rather than the dichotomous ratings. The first 10 factors accounted for 62% of the variance in scaled ratings (with eigenvalues of 7.79, 6.37, 6.22, 6.19, 5.26, 4.04, 3.97, 3.89, 2.39, and 1.92). Again, the ten factors from the scaled ratings roughly corresponded with the ten DSM–IV PDs, although they did not emerge in exactly the same order. The median correlation between factors tapping the

TABLE 3. Correlations between Factor-analytically Derived PD Scores and DSM–IV PD Diagnoses Based on Absent/Present Criteria Ratings[a]

	Factor 1 AVPD	Factor 2 APD	Factor 3 HPD	Factor 4 NPD	Factor 5 SPD	Factor 6 PPD	Factor 7 OCPD	Factor 8 STPD	Factor 9 DPD	Factor 10 BPD
Cluster A										
Paranoid	.19**	.10	.25**	.10	.13*	.71**	–.09	.12*	.05	.10
Schizoid	.22**	.23**	–.10	.01	.66**	.17**	.17**	.05	–.01	.00
Schizotypal	.20**	.02	.08	.11	.24**	.23**	–.05	.56**	–.05	–.02
Cluster B										
Antisocial	–.03	.78**	.12*	.18**	.04	.01	–.08	.05	.03	–.01
Borderline	.05	.27**	.25**	.08	.03	.19**	–.05	.12*	.27**	.60**
Histrionic	.03	.13*	.65**	.12*	–.03	.08	–.08	.11	.15**	.17**
Narcissistic	–.05	.25**	.16**	.68**	.17**	.21**	.10	.04	.01	–.01
Cluster C										
Avoidant	.77**	–.09	–.05	–.01	.09	.23**	.11	.05	.10	–.02
Dependent	.33**	.03	.29**	.05	.01	.04	.04	.04	.54**	.02
Obsessive–Compulsive	.14*	–.09	–.05	.19**	.04	–.04	.75**	.08	.06	–.04

[a]AVPD = Avoidant personality disorder, DPD = Dependent, SPD = Schizoid, STPD = Schizotypal, APD = Antisocial, BPD = Borderline, NPD = Narcissistic, HPD = Histrionic, PPD = Paranoid, OCPD = Obsessive–compulsive. *$p < 0.05$, **$p < 0.01$.

same personality disorder based on dichotomous and scaled ratings was 0.71 (range: 0.38 to 0.81). Correlations between factors tapping different types of personality disorder were in nearly every case nonsignificant, reaching a maximum of 0.21. The median correlation between factors based on scaled ratings and the presence or absence of each DMS–IV PD diagnosis was 0.54 (range: 0.07 to 0.68). Correlations between factors and any PD other than the one most closely related to it were generally small and nonsignificant, with a minority as high as 0.32.

CONFIRMATORY FACTOR ANALYSIS

In a final set of analyses, we moved to confirmatory procedures, using CFA to ascertain the extent to which the dimensions of personality pathology assessed by Axis II criteria in adolescents resemble the hierarchical factor structure of the DSM–IV. For these analyses we used the 1 to 7 ratings of each of the Axis II symptoms (rather than the present/absent ratings of each symptom) as indicators of each latent variable (the 10 PDs), because 7–point ratings do not require the creation of item parcels, and using item parcels would have rendered the analyses more distant from the hypothesis under investigation.

We compared three nested models. In the first, the ten PDs were constrained to be uncorrelated. In the second, the PDs were hypothesized to correlate within clusters, but the higher–order latent variables representing the three DSM–IV clusters were constrained to be uncorrelated. In the third model, the higher–order cluster variables were allowed to correlate.[2]

As is standard practice in CFA, we used multiple indices to assess goodness of fit. The chi-square discrepancy index indicates fit between the data and the model but can be overly sensitive for large sample sizes. The normed fit index (NFI) and Tucker–Lewis index (TLI) (Bentler & Bonett, 1980) range in value from 0 to 1, with values >0.9 indicating that the model fits the data well. For the root–mean–square error of approximation (RMSEA), values ≤0.08 suggest acceptable model fit (Browne & Cudek, 1993). To assess the relative fit of nested models, we used chi–square difference tests, which indicate whether extra parameters increase fit; and the Akaike Information Criterion (AIC), for which lower values indicate better fit.

The results of the three CFAs are displayed in Figures 2, 3, and 4. Progressing from the first model (uncorrelated factors, no hierarchical structure) to the third (hierarchical structure, correlated higher–order factors), the RMSEA and AIC decrease as the higher-order clusters are added and then are free to correlate (see Table 4). The chi–square difference test be-

2. We used maximum likelihood estimation with means and intercepts to make use of both complete and partial data, as we had no reason to believe that adolescent patients whose treating clinicians missed two or three ratings out of roughly 80 would differ substantially in symptom covariation. However, we also reran all analyses including only cases with complete data and verified that the results were largely the same.

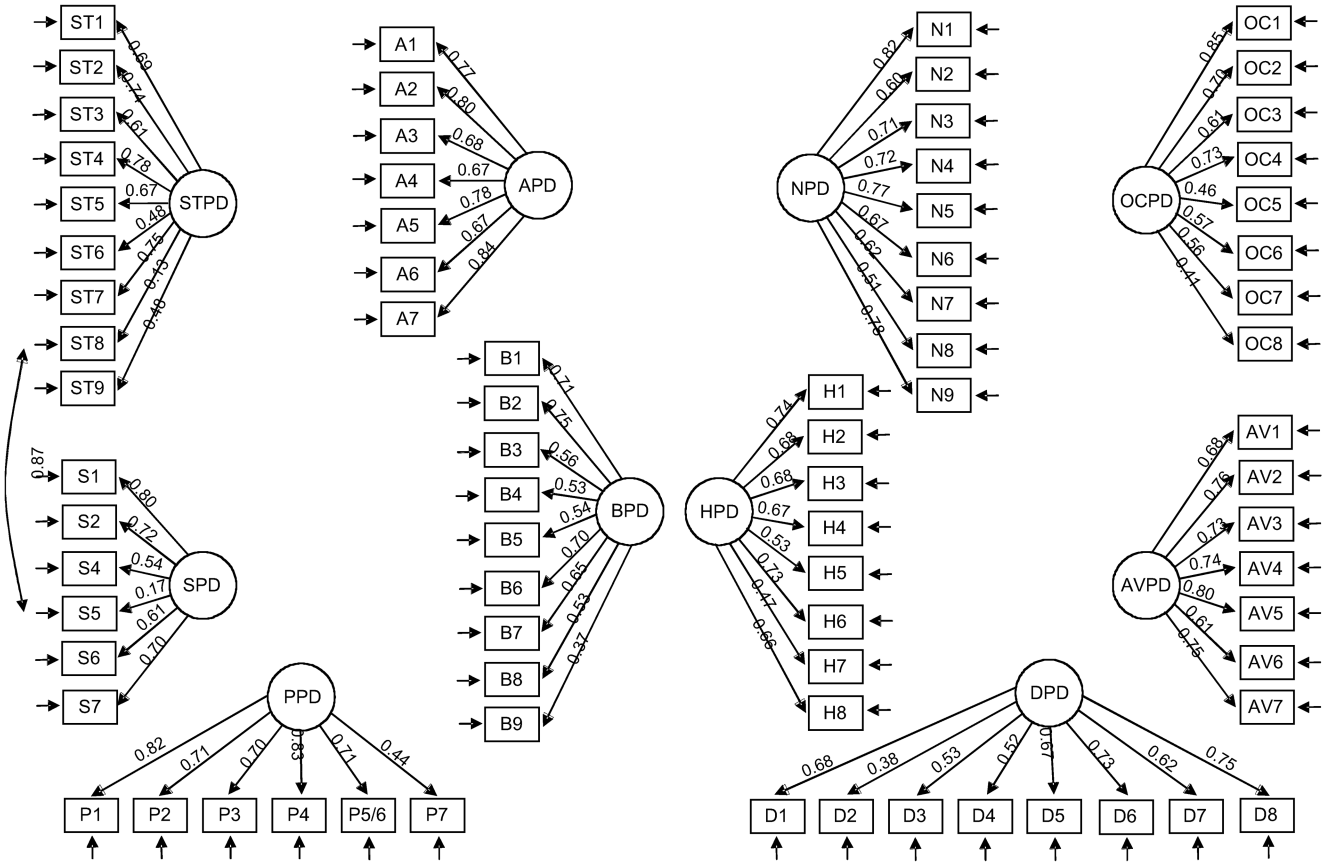

FIGURE 2. Confirmatory Factor Analysis of Axis II Scaled Criteria Ratings with Uncorrelated Factors.
Note. AVPD = Avoidant personality disorder, DPD = Dependent, SPD = Schizoid, STPD = Schizotypal, APD = Antisocial, BPD = Borderline, NPD = Narcissistic, HPD = Histrionic, PPD = Paranoid, OCPD = Obsessive–Compulsive; criteria are numbered according to their order in the DSM–IV definition for each personality disorder.

TABLE 4. Model Fit Indices for Confirmatory Factor Analysis

Model	χ^2	*df*	*p*	NFI	TLI	AIC	RMSEA	RMSEA Lower and Upper Bounds
Uncorrelated factors, no hierarchical structure	8371.9	2848	0.000	0.77	0.82	9195.9	0.084	(0.082, 0.086)
Correlated factors, uncorrelated higher–order factors	7885.9	2841	0.000	0.79	0.84	8363.9	0.078	(0.076, 0.080)
Correlated factors, correlated higher–order factors	7604.1	2838	0.000	0.80	0.85	8088.1	0.075	(0.073, 0.077)

Note. NFI = Normed fit index; TLI = Tucker–Lewis index; AIC = Akaike information criterion; RMSEA = Root–mean–square error of approximation; based on absent/present personality disorder criteria ratings.

tween the first and second model was significant ($\chi^2 7\text{df} = 486.0$, $p < 0.001$), as was the chi–square difference test between the second and third model ($\chi^2_{3\text{df}} = 281.8$, $p < 0.001$). Therefore, the best fitting model includes higher-order factors that are allowed to correlate. In this model, items loaded strongly on their respective PDs, and PDs loaded strongly on their respective clusters. The correlations between the higher–order factors, however, were also high, suggesting substantial diagnostic redundancy: $r_{AB} = 0.80$, $r_{BC} = 0.58$, and $r_{AC} = 0.85$. The fit of this model was just acceptable, with a RMSEA below the recommended cutoff of 0.08 and NFI and TLI values that indicated nontrivial model misfit. Some of this model misfit may reflect item–level correlations across disorders and clusters (and correlated errors that we could not model without problems of identification). We tested this possibility by examining two smaller hierarchical models of Borderline and Antisocial PDs and comparing model fit in each with and without allowing item-level errors to correlate. Model fit improved considerably when errors were correlated in each case, and it is likely that this finding would generalize to the larger three-cluster model tested above. However, as suggested above, testing this directly is impractical given the complexity and the loss of degrees of freedom.

DISCUSSION

Both item–level cluster analysis and exploratory factor analysis of various methods of measuring the DSM–IV Axis II disorders reproduced the ten DSM–IV PDs with a moderate degree of fidelity. Confirmatory factor analysis indicated just adequate fit for a model that included these ten disorders as first–order factors in a hierarchical model. The consistency with which we could reproduce dimensions similar to the DSM–IV PDs was surprisingly robust across different clustering algorithms and methods of factor rotation, particularly given that it was applied to a population (adoles-

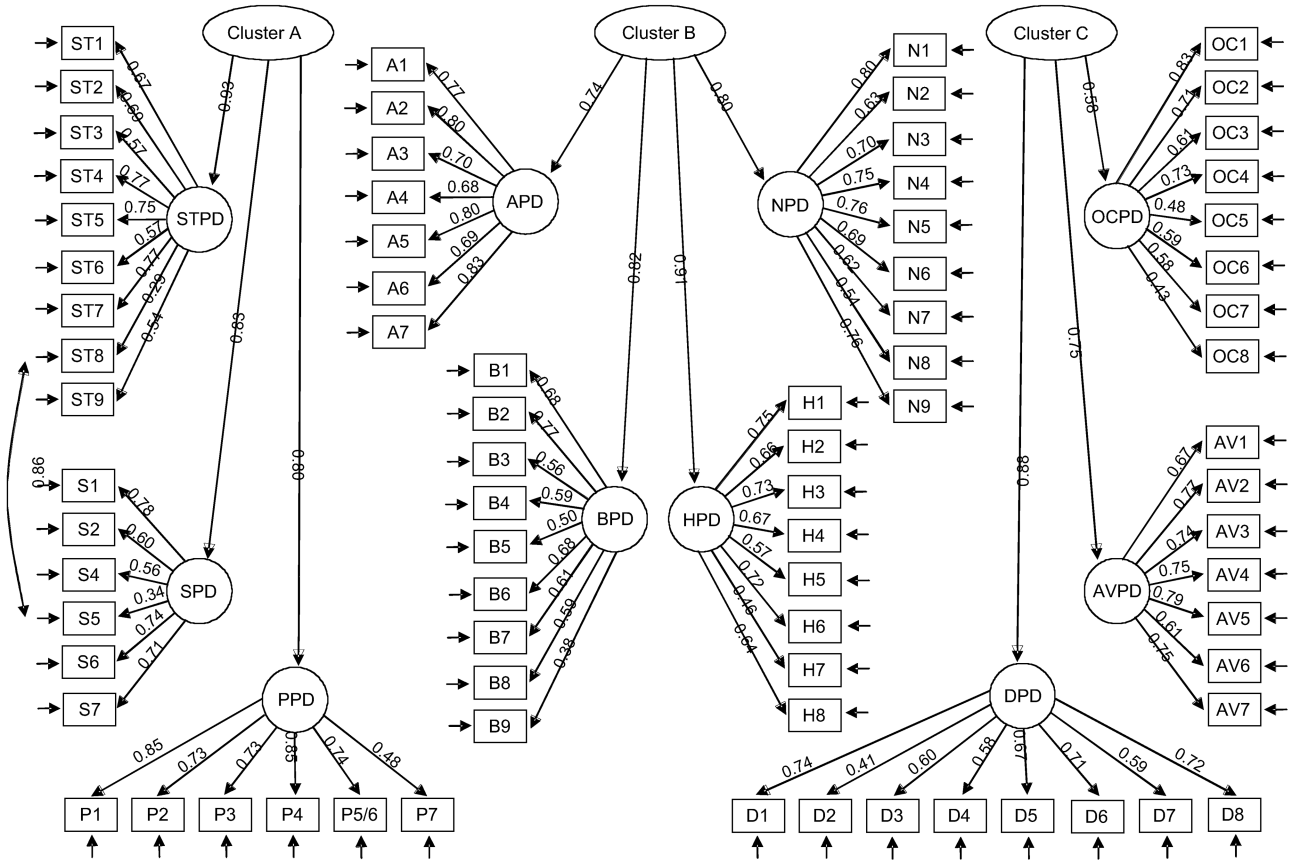

FIGURE 3. Confirmatory Factor Analysis of Axis II Scaled Criteria Ratings with Hierarchical Structure but Uncorrelated Higher–Order Factors.

Note. AVPD = Avoidant personality disorder, DPD = Dependent, SPD = Schizoid, STPD = Schizotypal, APD = Antisocial, BPD = Borderline, NPD = Narcissistic, HPD = Histrionic, PPD = Paranoid, OCPD = Obsessive–compulsive; criteria are numbered according to their order in the DSM–IV definition for each personality disorder.

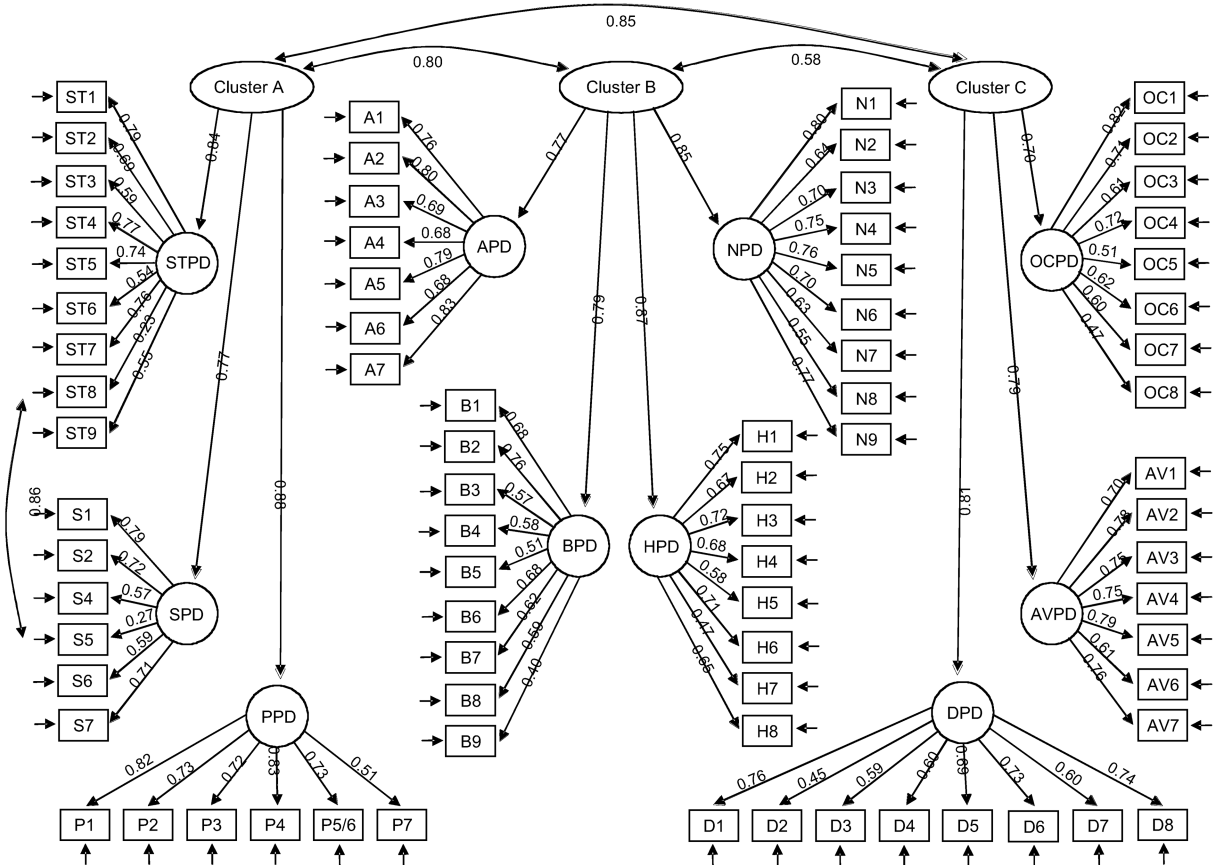

FIGURE 4. Confirmatory Factor Analysis of Axis II Scaled Criteria Ratings with Hierarchical Structure and Correlated Higher–Order Factors.

Note. AVPD = Avoidant personality disorder, DPD = Dependent, SPD = Schizoid, STPD = Schizotypal, APD = Antisocial, BPD = Borderline, NPD = Narcissistic, HPD = Histrionic, PPD = Paranoid, OCPD = Obsessive–compulsive; criteria are numbered according to their order in the DSM–IV definition for each personality disorder.

cents) from whom it was not derived and for whom it was not intended, and given the inconsistency in the adult literature using similar statistical procedures. Despite changes in Axis II from DSM–III–R to DSM–IV, the fact that DSM structure of individual PDs was recovered by cluster analytic procedures in both Morey's (1988) study and ours points to a strong resemblance between the structure of adult and adolescent personality pathology as assessed using DSM–IV criteria. This suggests that Axis II provides the same kind of information for adolescents as it does for adults. Whether it provides the most useful or optimal system for classifying adolescent personality pathology cannot be determined from these data, given that we used indicators that presumed the current diagnostic system (see Westen et al., 2003).

The DSM criterion sets have, of course, been designed over successive generations of the DSM to maximize convergent and discriminant validity (see, e.g., Blais & Norman, 1997). Nevertheless, the concordance between the structure obtained using two very different families of statistical procedures suggests that the work groups charged with revising Axis II have accomplished one of their primary goals. From the present point of view, what is equally important is that this structure can be recovered in an adolescent sample, suggesting that the Axis II criteria function similarly in adolescents as in adults.

Although we found strong empirical support for the structure of the DSM–IV PDs using Axis II criteria as indicators, we found inconsistent support for the hierarchical arrangement of superordinate PD clusters in the DSM. Hierarchical cluster analysis and EFA of items yielded interpretable clusters that only incompletely matched the three DSM–IV clusters. Confirmatory factor analysis suggested barely adequate fit for a hierarchical model of ten PDs with three higher–order factors corresponding to the three DSM–IV clusters, and these clusters were very highly correlated. These findings are of particular note because problems with comorbidity have led many researchers to report PD data at the cluster level rather than the level of individual diagnoses. These data suggest that analyses at the level of the three clusters may yield even less specific data than generally assumed, except, perhaps, where researchers partial out shared variance.

An apparent paradox in the data is that although we were able to reproduce the ten Axis II PDs, comorbidity in this sample is extremely high using the same items (criteria) when Axis II diagnoses are treated either categorically (using DSM–IV algorithms) or dimensionally (using the number of criteria for each disorder met as a dimensional diagnosis and using the correlations among the dimensions as a measure of comorbidity) (Westen et al., 2003). This may be related to the fact that we could reproduce the structure of the DSM–IV PDs using statistical analyses that aggregated items across cases but not cases across items (the traditional use of cluster analysis). This paradox likely reflects the fact that although the item sets represented in DSM–IV show internal consistency as factors representing latent traits, many of these factors (traits) are highly correlated,

leading to substantial diagnostic overlap, particularly if one views PDs typologically, as in DSM-IV. To put it another way, although the architects of the most recent editions of the DSM have succeeded in purifying the trait structure of the PDs, these traits are themselves highly correlated, so that the disorders themselves are highly correlated and overlapping even though the item sets yield internally consistent trait measures. This suggests the limitations of using statistical procedures designed to identify nonredundant traits to try to refine typological constructs (represented by the DSM Axis II disorders). If Axis II is to retain a typological structure (whether categorical or dimensional), with disorders essentially defined by *constellations* of traits, researchers will need to use different procedures to identify or refine diagnoses than if Axis II is to be redefined in terms of traits, even hierarchically organized traits.

POTENTIAL OBJECTIONS AND LIMITATIONS

This study has several limitations. First, data were all provided by patients' treating clinicians, without the use of structured interviews, raising questions about the reliability of their judgments. In several investigations, however, we have found that clinicians are able to make highly reliable and valid judgments about personality and psychopathology *if given psychometrically appropriate ways of doing so* (e.g., Westen & Muderrisoglu, 2003, in press; Westen et al., 2003). For example, the factor structure and correlates of clinician–report versions of measures such as the Child Behavior Checklist (Achenbach, 1991) and Parental Bonding Instrument (Parker, Tupling, & Brown, 1979) are virtually identical to the factor structure and correlates of the parent– or self–report version of these measures (Dutra, Campbell, & Westen, 2004; Russ, Heim, & Westen, 2003). Further, the judgments of clinicians with an average of over 13 years of experience, who have known the patient over an extended period of time (in this case, for 20 sessions on average), are likely to be comparably informative relative to self–reports or judgments made in brief interviews that sample a cross–section of verbal behavior on a single day, particularly with adolescent informants.

Second, the concordance between the observed structure in the data and the DSM–IV PDs may reflect in part the impact of the DSM–IV itself on clinicians' conceptualization of PDs and thus their diagnostic ratings on the Axis II Checklist. Although clearly a limitation, we minimized this possibility by listing the criteria in random order and by asking clinicians to select a patient with personality pathology whether or not the patient met any adult Axis II PD criteria. Further, when we calculated PD diagnoses ourselves from clinicians' checklist data using DSM–IV algorithms, the resulting diagnoses did not correspond strongly with the categorical diagnoses made by clinicians themselves when asked to make free–form diagnoses of these patients (see Westen et al., 2003). For example, few clinicians diagnosed patients with Avoidant or Antisocial PD when asked to make categorical diagnoses, whereas dozens of patients received each of

these diagnoses when we applied DSM–IV algorithms to the Axis II Checklist data. Thus, clinicians either did not know, or did not use, DSM criteria in making most PD diagnoses, and it is difficult to sustain the view that their checklist data reflected a knowledge of or cognitive commitment to the criterion sets in the DSM–IV. (Factor– and Q–factor-analyses of other personality pathology data from the same sample also did not identify categories or dimensions strongly resembling the DSM structure; see Westen et al., 2003; Westen, Dutra, & Shedler, 2005).

A third limitation regards the question of the durability of personality pathology in adolescence and the appropriateness of diagnosing personality pathology at all in teenagers, an issue we have addressed in detail elsewhere (Westen & Chang, 2000). The data presented here are cross–sectional, and future research should surely employ longitudinal designs. However, the items were constructed so as to assess traits rather than states; clinicians were instructed to describe only enduring aspects of the patient's personality and typically had seen the patients over a period of time long enough to distinguish state–dependent features; and personality data from this dataset have proven strong predictors of etiological and adaptive functioning variables, even holding constant Axis I diagnoses such as conduct disorder (Westen et al., 2003).

A final potential limitation is response rate. Although we would have preferred a higher response rate, particularly from members of the American Academy, the facts that clinician–participants received minimal compensation for a relatively time–consuming task and that many randomly selected members of the Academy either did not meet study criteria or do not treat adolescents rendered a high response rate unlikely. Further, our aim was not to survey clinician attitudes (for which a random sample of clinicians unbiased by potential differences between responders and nonresponders would be essential) but to obtain a relatively diverse cross–section of adolescents with personality pathology treated nationally. The sample is likely to be comparably representative of the population of interest relative to the average study of adolescent psychopathology, in which patients are treated in a single location (usually a university hospital) and respond to advertisements with unknown response rates. Further, it is difficult to frame a clear hypothesis about how the findings might reflect artifacts of biases imposed by the kinds of clinicians willing or unwilling to participate in research. Finally, whereas psychologists and psychiatrists responded in this and similar studies from our laboratory at widely differing rates, the data they provided were indistinguishable on variables of interest for this investigation, suggesting that response rates had little impact on the findings.

CONCLUSIONS

Within the context of these limitations, the data suggest, like other recent studies, that personality pathology is not limited to adulthood. To the extent that DSM–IV provides criteria useful for assessing adults, these crite-

ria yield diagnoses with similar operating characteristics in adolescents. The data presented here, like the data from other recent studies of adolescent PDs, suggest that personality pathology is likely to be important to assess in adolescents as it is in adults, whether or not DSM–IV categories are the optimal way of classifying it.

REFERENCES

Aakrog, T. (1981). The borderline concept in childhood, adolescence, and adulthood: Borderline adolescents in psychiatric treatment and 5 years later. *Acta Psychiatrika Scandinavika, 293 (Suppl.),* 1–300.

Achenbach, T. M. (1991). *Manual for the Child Behavior Checklist.* Burlington, VT: University of Vermont, Department of Psychiatry.

American Psychiatric Association. (APA). (1987). *Diagnostic and statistical manual of mental disorders* (3rd ed., rev.). Washington, DC: Author.

American Psychiatric Association. (APA). (1994). *Diagnostic and statistical manual of mental disorders* (4th ed.). Washington, DC: Author.

Bentler, P. M., & Bonnet, D. G. (1980). Significance tests and goodness-of-fit in the analysis of covariance structures. *Psychological Bulletin, 88*, 588–606.

Bernstein, D. P., Cohen, P., Skodol, A., Bezirginian, S., & Brook, J. S. (1996). Childhood antecedents of adolescent personality disorders. *American Journal of Psychiatry, 153,* 907–913.

Bernstein, D. P., Cohen, P., Velez, C. N., Schwab–Stone, M., Siever, L. J., & Shinsato, L. (1993). Prevalence and stability of the DSM–III–R personality disorders in a community–based survey of adolescents. *American Journal of Psychiatry, 150,* 1237–1243.

Blais, M. A., & Norman, D. K. (1997). A psychometric evaluation of the DSM–IV personality disorder criteria. *Journal of Personality Disorders, 11,* 168–176.

Blashfield, R. K. (1991). Models of psychiatric classification. In M. Hersen & S. M. Turner (Eds.), *Adult psychopathology and diagnosis* (2nd ed., pp. 3–22). New York: John Wiley and Sons, Inc.

Blashfield, R. K. (1984). *The classification of psychopathology: Neo–Kraepelinian and quantitative approaches.* New York: Plenum Press.

Block, J. H., Gjerde, P., & Block, J. H. (1991). Personality antecedents of depressive tendencies in 18–year–olds: A prospective study. *Journal of Personality and Social Psychology, 60,* 726–738.

Browne, M. W., & Cudek, R. (1993). Alternative ways of assessing model fit. In K. A. Bollen & J. S. Long (Eds.), *Testing structural equation models* (pp. 136–162). Newbury Park, CA: Sage Publications.

Cacciola, J. S., Rutherford, M. J., Alterman, A. I., McKay, J. R., & Mulvaney, F. D. (1998). Long–term test–retest reliability of personality disorder diagnoses in opiate dependent patients. *Journal of Personality Disorders, 12,* 332–337.

Caspi, A. (1998). Personality development across the lifespan. In W. Damon (Ed.), N. Eisenberg (Vol. Ed.), *Handbook of child psychology: Vol 3: Social, emotional, and personality development* (pp. 311–388). New York: John Wiley and Sons, Inc.

Caspi, A., Elder, G. E., & Herbener, E. (1990). Childhood personality and the prediction of lifecourse patterns. In L. N. Robins & M. Rutter (Eds.), *Straight and devious pathways from childhood to adulthood* (pp. 13–35). New York: Cambridge University Press.

Caspi, A., & Silva, P. A. (1995). Temperamental qualities at age three predict personality traits in young adulthood: Longitudinal evidence from a birth cohort. *Child Development, 66,* 486–498.

Daley, S. E., Hammen, C., Burge, D., Davila, J., Paley, B. et al. (1999). Depression and Axis II symptomatology in an adolescent community sample: Concurrent and longitudinal associations. *Journal of Personality Disorders, 13,* 47–59.

Deary, I. J., Peter, A., Austin, E., & Gibson, G. (1998). Personality traits and per-

sonality disorders. *British Journal of Psychology, 89,* 647–661.

De Clercq, B., & De Fruyt, F. (2003). Personality disorder symptoms in adolescence: A Five–Factor Model perspective. *Journal of Personality Disorders, 17,* 269–292.

Dutra, L., Campbell, L., and Westen, D. (2004). Quantifying clinical judgment in the assessment of adolescent psychopathology: Reliability, validity, and factor structure of the Child Behavior Checklist for clinician–report. *Journal of Clinical Psychology, 60,* 65–85.

Edelbrock, C. (1979). Mixture model tests of hierarchical clustering algorithms. *Multivariate Behavioral Research, 14,* 367–384.

Ekselius, L., Lindstroem, E., von Knorring, L., Bodlund, O. et al. (1994). A principal component analysis of the DSM–III–R Axis II personality disorders. *Journal of Personality Disorders, 8,* 140–148.

First, J. S., Spitzer, R. L., Gibbon, M., & Williams, J. B. W. (1995). The Structured Clinical Interview for DSM–III–R Personality Disorders (SCID–II): II. Multi–site test–retest reliability study. *Journal of Personality Disorders, 9,* 92–104.

Fossati, A., Maffei, C., Bagnato, M., Battaglia, M., Donati, D. et al. (2000). Patterns of covariation of DSM–IV personality disorders in a mixed psychiatric sample. *Comprehensive Psychiatry, 41,* 206–215.

Frances, A., Clarkin, J., Gilmore, M., Hurt, S., & Brown, S. (1984). Reliability of criteria for Borderline Personality Disorder: A comparison of DSM–III and the Diagnostic Interview for Borderline Patients. *American Journal of Psychiatry, 141,* 1080–1084.

Golombek, H., Marton, P., Stein, B., & Korenblum, M. (1986). Personality dysfunction and behavioral disturbance in early adolescence. *Journal of the American Academy of Child and Adolescent Psychiatry, 25,* 697–703.

Grilo, C. M., McGlashan, T. H., Quinlan, D. M., Walker, M. L., Greenfield, D., & Edell, W. S. (1998). Frequency of personality disorders in two age cohorts of psychiatric inpatients. *American Journal of Psychiatry, 155,* 140–142.

Horn, J. (1965). A rationale and test for the number of factors in factor analysis. *Psychometrika, 30,* 179–185.

Hyler, S.E., & Lyons, M. (1988). Factor analysis of the DSM–III personality disorder clusters: A replication. *Comprehensive Psychiatry, 29,* 304–308.

Hyler, S. E., Lyons, M., Rieder, R. O., Young, L., Williams, J. B. W., & Spitzer, R. L. (1990). The factor structure of self–report DSM–III Axis II symptoms and their relationship to clinicians' ratings. *American Journal of Psychiatry, 147,* 751–757.

Jacobsen, T., & Hofmann, V. (1997). Children's attachment representations: Longitudinal relations to school behavior and academic competency in middle childhood and adolescence. *Developmental Psychology, 33,* 703–710.

Johnson, J. G., Cohen, P., Skodol, A. E., Oldham, J. M., Kasen, S., & Brook, J. S. (1999). Personality disorders in adolescence and risk of major mental disorders and suicidality during adulthood. *Archives of General Psychiatry, 56,* 850–811.

Kagan, J., & Snidman, N. (1991). Temperamental factors in human development. *American Psychologist, 46,* 856–862.

Kasen, S., Cohen, P., Skodol, A. E., Johnson, J. G., & Brook, J. S. (1999). Influence of child and adolescent psychiatric disorders on young adult personality disorder. *American Journal of Psychiatry, 156,* 1529–1535.

Kass, F., Skodol, A., Charles, E., Spitzer, R., & Williams, J. (1985). Scaled ratings of DSM–III personality disorders. *American Journal of Psychiatry, 142,* 627–630.

Korenblum, M., Marton, P., Golombek, H., & Stern, B. (1990). Personality status: Changes through adolescence. *Psychiatric Clinics of North America, 13,* 389–399.

Kuiper, F., & Fisher, L. (1975). A Monte Carlo comparison of six clustering procedures. *Biometrics, 31,* 777–783.

Levy, K. N., Becker, D. F., Grilo, C. M., Mattanah, J. J. F., Garnet, K. E. et al. (1999). Concurrent and predictive validity of the personality disorder diagnosis in adolescent patients. *American Journal of Psychiatry, 156,* 1522–1528.

Lewinsohn, P. M., Rohde, P., Seeley, J. R., & Klein, D. N. (1997). Axis II pathology as a function of Axis I disorders in childhood and adolescence. *Journal of the American Academy of Child and Adolescent Psychiatry, 36,* 1752–1759.

Ludolph, P., Westen, D., Misle, B., Jackson, A., Wixom, J., & Wiss, F.C. (1990). The borderline diagnosis in adolescents: Symptoms and developmental history. *American Journal of Psychiatry, 147*, 470–476.

Mattanah, J. J. F., Becker, D. F., Levy, K.N., Edell, W. S. et al. (1995). Diagnostic stability in adolescents followed up 2 years after hospitalization. *American Journal of Psychiatry, 152*, 889–894.

Morey, L. C. (1988). The categorical representation of personality disorder: A cluster analysis of DSM–III–R personality features. *Journal of Abnormal Psychology, 97*, 314–321.

O'Connor, B. P. (2000). SPSS and SAS programs for determining the number of components using parallel analysis and Velicer's MAP test. *Behavior Research Methods, Instruments, & Computers, 32*, 396–402.

O'Connor, B. P., & Dyce, J. A. (1998). A test of models of personality disorder configuration. *Journal of Abnormal Psychology, 107*, 3–16.

Offer, D., Kaiz, M., Howard, K. I., & Bennett, E. S. (1998). Emotional variables in adolescence, and their stability and contribution to the mental health of adult men: Implications for early intervention strategies. *Journal of Youth and Adolescence, 27*, 675–685.

Oltmanns, T. F., Turkheimer, E., & Strauss, M. E. (1998). Peer assessment of personality traits and pathology in female college students. *Assessment, 5*, 53–65.

Parker, G., Tupling, H., & Brown, L. B. (1979). A parental bonding instrument. *British Journal of Medical Psychology, 52*, 1–10.

Rand, W. M. (1971). Objective criteria for the evaluation of clustering methods. *Journal of the American Statistical Association, 66*, 846–850.

Russ, E., Heim, A., & Westen, D. (2003). Parental bonding and personality pathology assessed by clinician report. *Journal of Personality Disorders, 17*, 522–536.

Sanislow, C. A., Morey, L. C., Grilo, C. M., Gunderson, J. G., Shea, M. T. et al. (2002). Confirmatory factor analysis of DSM–IV Borderline, Schizotypal, Avoidant and Obsessive–Compulsive Personality Disorders: Findings from the Collaborative Longitudinal Personality Disorders Study. *Acta Psychiatrica Scandinavica, 105*, 28–36.

Schotte, C. K. W., De Doncker, D., Vankerckhoven, C., Vertommen, H., & Cosyns, P. (1998). Self–report assessment of the DSM–IV personality disorders: Measurement of trait and distress characteristics: The ADP–IV. *Psychological Medicine, 28*, 1179–1188.

Skinner, H. A., & Blashfield, R. K. (1982). Increasing the impact of cluster analysis research: The case of psychiatric classification. *Journal of Consulting and Clinical Psychology, 50*, 727–735.

Sroufe, L. A., Carlson, E., & Shulman, S. (1993). Individual in relationships: Development from infancy through adolescence. In D. C. Funder, R. Parke, C. Tomlinson–Keesey, & K. Widaman (Eds.), *Studying lives through time: Approaches to personality and development* (pp. 315–342). Washington, DC: American Psychological Association.

Thomas, C., Turkheimer, E., & Oltmanns, T. F. (2003). Factorial structure of pathological personality as evaluated by peers. *Journal of Abnormal Psychology, 112*, 81–91.

Westen, D., & Chang, C.M. (2000). Adolescent personality pathology: A review. *Adolescent Psychiatry, 25*, 61–100.

Westen, D., & Muderrisoglu, S. (2003). Reliability and validity of personality disorder assessment using a systematic clinical interview: Evaluating an alternative to structured interviews. *Journal of Personality Disorders, 17*, 351–369.

Westen, D., & Muderrisoglu, S. (in press). Clinical assessment of pathological personality traits. *American Journal of Psychiatry.*

Westen, D., Dutra, L., & Shedler, J. (2005). Assessing adolescent personality pathology: Quantifying clinical judgment. *British Journal of Psychiatry, 186*, 227–238.

Westen, D., Shedler, J., Durrett, C., Glass, S., & Martens, A. (2003). Personality diagnoses in adolescence: DSM-IV Axis II diagnoses and an empirically derived alternative. *American Journal of Psychiatry, 160*, 952–966.

Wigider, T. A. (1993). The DSM–III–R categorical personality disorder diagnoses: A critique and an alternative. *Psychological Inquiry, 4*, 75–90.

Widiger, T. A., Trull, T. J., Hurt, S. W., Clarkin, J., & Frances, A. (1987). A multidimensional scaling of the DSM–III personality disorders. *Archives of General Psychiatry, 44,* 557–563.

Wolff, S., & Chick, J. (1980). Schizoid personality in childhood: A controlled follow-up study. *Psychological Medicine, 10,* 85–100.

Yang, J., Bagby, M., Costa, P. T., Ryder, A. G., & Herbst, J. H. (2002). Assessing the DSM–IV structure of Personality Disorder with a sample of Chinese psychiatric patients. *Journal of Personality Disorders, 16,* 317–331.

Zimmerman, M., & Coryell, W. (1990). Diagnosing personality disorders in the community: A comparison of self–report and interview measures. *Archives of General Psychiatry, 47,* 527–531.